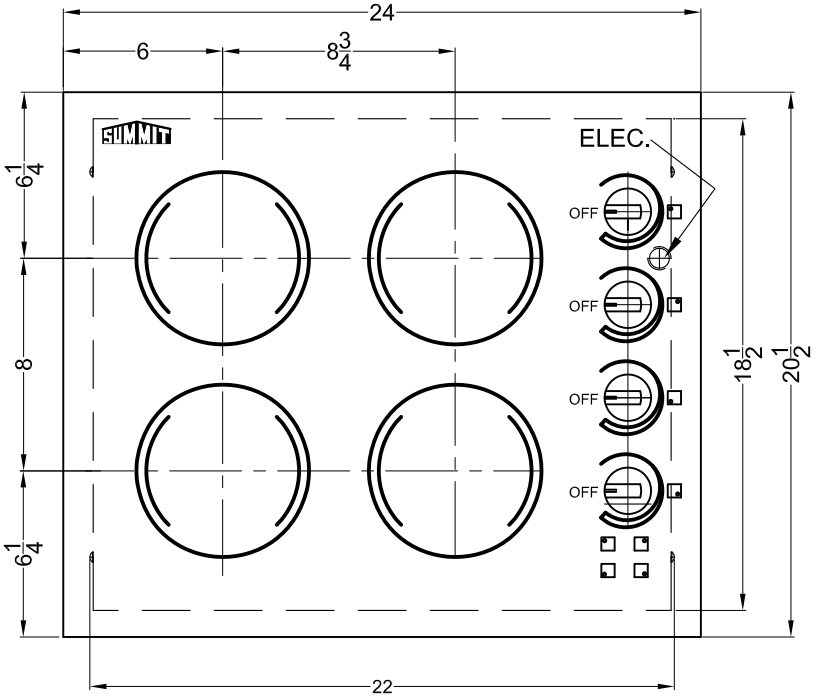

TOP VIEW

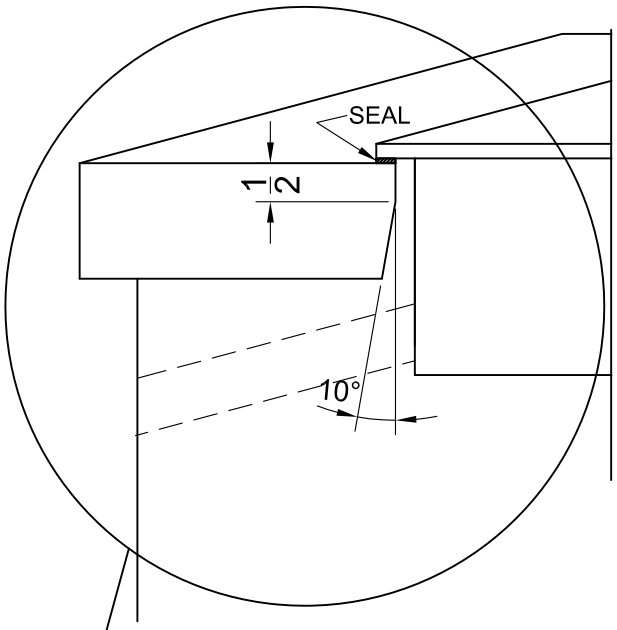

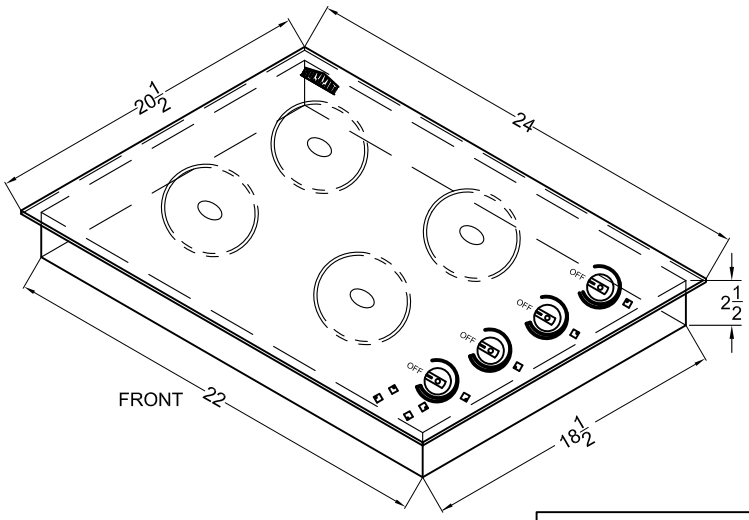

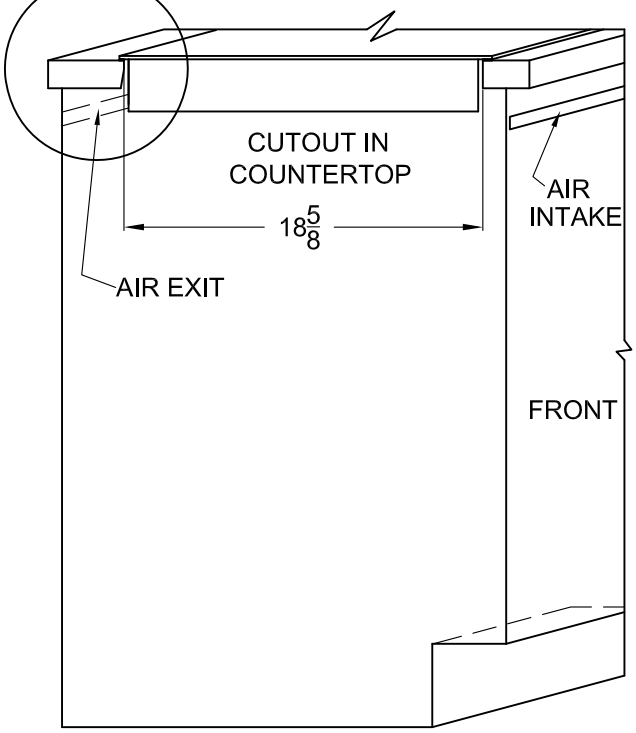

MODEL: CR424
220V-60Hz 21A MAX.
(4) @ 1200W = 4800W

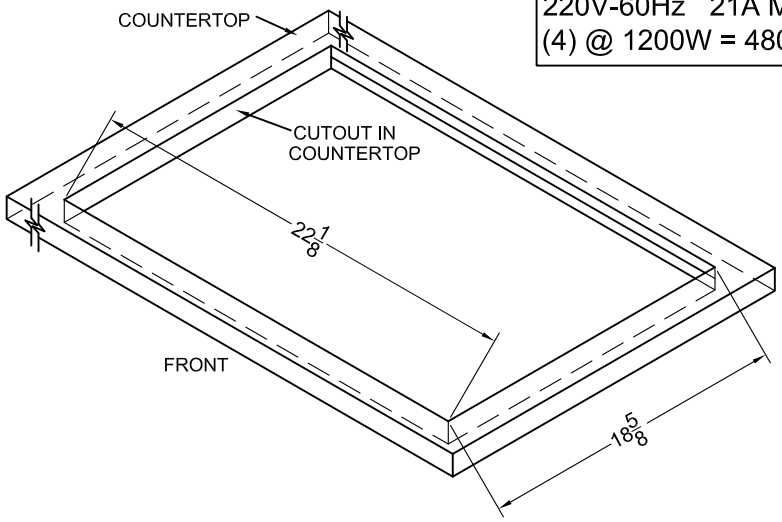

MODEL No. CR424

TYPE:
COOKTOP ASSY

SUMMIT
SPECIALTY MAJOR APPLIANCES

FELIX STORCH INC
www.summitappliance.com
(718) 893-3900

DATE: MAY./22/12